LONG SEAMS

COURSE	ORIENTATION	ORIENTATION
1(TOP)	60°	240°
2	65°	245°
3	60°	240°
4	65°	245°
5	60°	240°
6	65°	245°
7	60°	240°
8	65°	245°

*VERT – TOP TO BOTTOM

Ship loose items:1
(6) ANCHOR CHAIRS
(2) ANCHOR CHAIRS w/ GROUND LUG

1 NOTE: ANCHOR CHAIR TO BE FIELD INSTALLED TO MATCH EXISTING ANCHOR BOLTS.

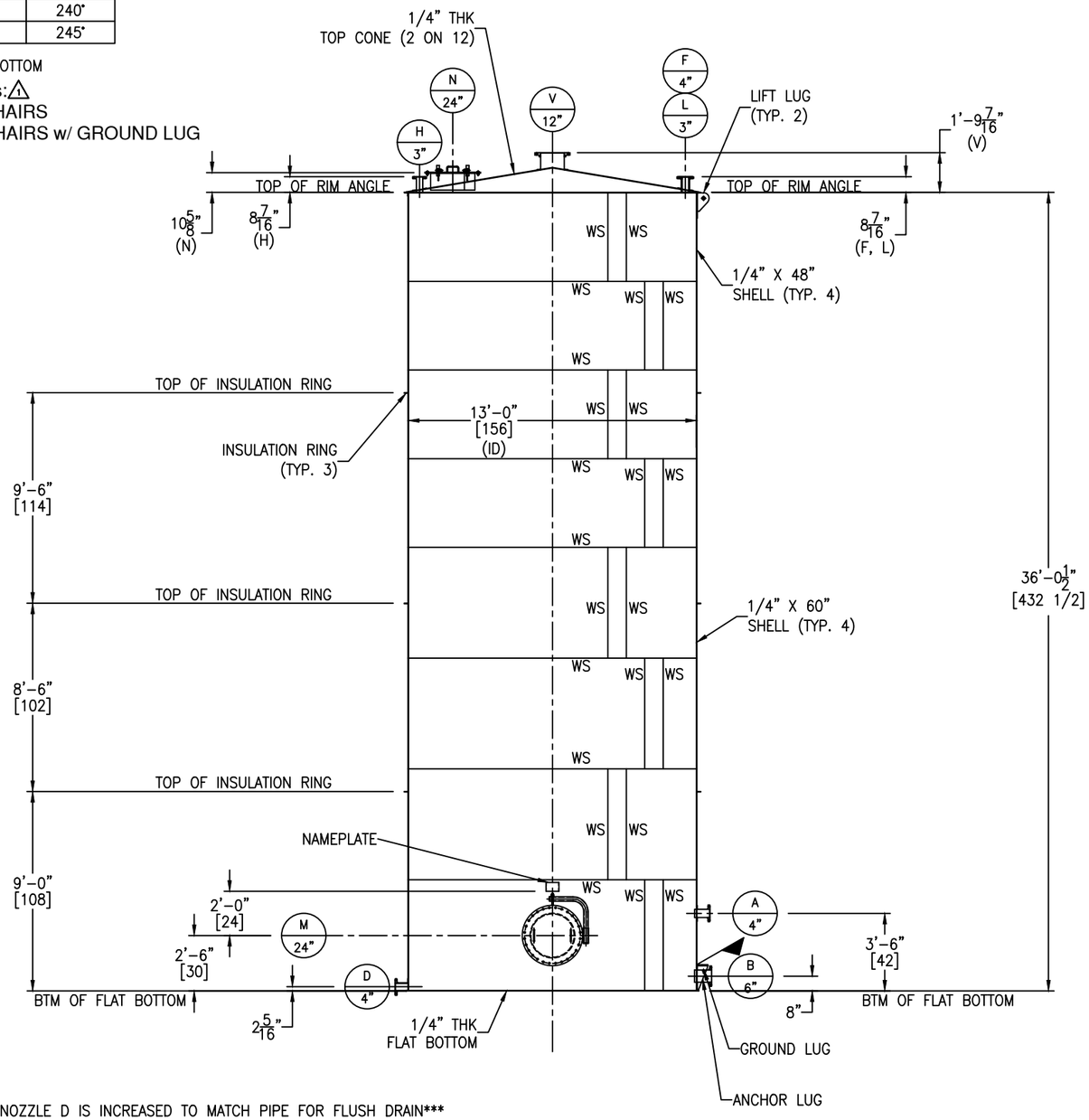

ELEVATION FOR NOZZLE D IS INCREASED TO MATCH PIPE FOR FLUSH DRAIN

FC-14 GT-11

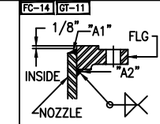

FIGURE NO. 1

FC-14 GT-11

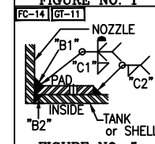

FIGURE NO. 5

FC-14 GT-11

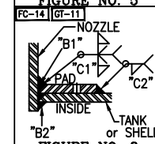

FIGURE NO. 8

FC-14 SA-30

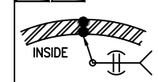

SHELL THK. < 5/16"

FIGURE NO. 9

NOZZLE SCHEDULE

MARK	SERVICE	SIZE	RATING	TYPE / STYLE	NECK SCHED.	PROJECTION EXT. (℄)	PROJECTION INT. (MIN.)	WELD FIGURE	REPAD SIZE (WIDTH X THK.)	WELD SIZE "A1"	"A2"	"B1"	"B2"	"C1"	"C2"
M	SHELL MANWAY	24"	–	API W/DAVIT	3/8"	6"	1"	8	2" X 3/16"	–	–	1/4	1/8	3/16	3/16
N	ROOF MANWAY	24"	–	API W/HINGE	1/4"	SEE DWG	1"	8	2" X 3/16"	–	–	1/4	1/8	3/16	3/16
V	VENT	12"	150#	RFSO	40S	SEE DWG	–	1,5	2" X 3/16"	3/8	3/8	1/4	1/8	3/16	3/16
A	PUMP SUCTION	4"	150#	RFSO	80S	7"	1"	1,8	2" X 3/16"	5/16	5/16	1/4	1/8	3/16	3/16
B	PUMP SUCTION	6"	150#	RFSO	80S	8"	1"	1,8	2" X 3/16" DOGHOUSE	7/16	7/16	1/4	1/8	3/16	3/16
F	FILL LINE	4"	150#	RFSO	80S	SEE DWG	1"	1,8	2" X 3/16"	5/16	5/16	1/4	1/8	3/16	3/16
D	DRAIN	4"	150#	RFSO	80S	7"	–	1,5	2" X 3/16" DOGHOUSE	5/16	5/16	1/4	1/2	3/16	3/16
H	BUBBLER	3"	150#	RFSO	80S	SEE DWG	1"	1,8	2" X 3/16"	5/16	5/16	5/16	1/8	3/16	3/16
L	LEVEL	3"	150#	RFSO	80S	SEE DWG	1"	1,8	2" X 3/16"	5/16	5/16	1/4	1/8	3/16	3/16

MATERIALS OF CONSTRUCTION

	VESSEL
SHELL	SA240-316/316L
TOP CONE/ FLAT BTM	SA240-316/316L
RIM ANGLE	SA479-316/316L
NOZZLE NECKS	SA312-316/316L WLD
NOZZLE FLANGES	SA182F-316/316L
MANWAY NECKS	SA240-316/316L
MANWAY FLANGES	SA240-316/316L
GASKETS	GARLOCK 3510
BOLTS/STUDS	SA193-B7 (ZINC PLATED)
NUTS	SA194-2H (ZINC PLATED)
REPADS	SA240-304/304L
COUPLINGS	–
SUPPORTS/HOLD DOWNS	SA240-304/304L
LIFTING LUGS	SA240-304/304L
VACUUM RINGS	–
INSULATION RINGS	SA240-304/304L
GROUND LUG	SA240-304/304L
BAFFLE	–
LADDER	–
TANK CLIPS (LADDER)	–
HANDRAIL	–
HANDRAIL CLIPS	–
PLATFORM	–
PLATFORM CLIPS	–
DIPTUBE SUPPORT	–
JACKET SHELL	–
JACKET HEADS	–
JACKET NOZZLE NECKS	–
JACKET NOZZLE FLANGES	–

DESIGN DATA

	VESSEL
DESIGN AND FAB. CODE	API650
CERT. STAMP REQ'D.	NO
DESIGN PRESSURE	ATM
DESIGN TEMPERATURE	200° F
MIN. DESIGN METAL TEMP.	-20° F @ ATM
OPERATING PRESSURE	–
OPERATING TEMPERATURE	–
JOINT EFFICIENCY HEADS	0.70
JOINT EFFICIENCY SHELL	0.70
CORROSION ALLOWANCE	1/16" (SHELL, CONE ROOF, FLAT BTM)
SPECIFIC GRAVITY	1.10
EARTHQUAKE ZONE	Ss = (0.240) S1 = (0.087)
WIND LOAD	107 MPH
STRESS RELIEF	NOT REQ'D
RADIOGRAPHIC EXAM	NOT REQ'D
DYE PENETRANT EXAM	NOT REQ'D
MAGNETIC PARTICLE EXAM	NOT REQ'D
HYDROSTATIC TEST	NOT REQ'D
PNEUMATIC TEST	2 PSIG / GAUGE #1
JKT DESIGN AND FAB. CODE	–
JKT CERT. STAMP REQ'D.	–
JKT DESIGN PRESSURE	–
JKT DESIGN TEMPERATURE	–
JKT MIN. DESIGN METAL TEMP.	–
JKT OPERATING PRESSURE	–
JKT OPERATING TEMPERATURE	–
JKT JOINT EFFICIENCY HEADS	–
JKT JOINT EFFICIENCY SHELL	–
JKT HYDRO TEST	–

VESSEL FINISH

INTERIOR WELD TREATMENT:	SAV TANK STANDARD
EXTERIOR WELD TREATMENT:	SAV TANK STANDARD
SAV TANK FINISHING STANDARD:	SEE NOTE 6
INSULATION:	2" BY OTHERS
PAINTING:	N/A

VESSEL CAPACITY AND WEIGHTS

OPERATING CAPACITY	–
FULL CAPACITY	36,100 GAL.
EMPTY SHIPPING WEIGHT	21,600 LBS.
WEIGHT FULL OF WATER	323,100 LBS.
WEIGHT FULL OF PRODUCT	353,200 LBS.

QUALITY CONTROL

ENG. _____ DATE: _____

Q.C. _____ DATE: _____

This drawing is issued for customer approval. please review, make approval changes (if any) in red. check the appropriate box, sign & date.

- ☐ Approval – no changes. Please proceed with fabrication.
- ☐ Approved as noted. Please proceed with fabrication
- ☐ Not approved. Please make changes and resubmit.

Customer signature _____ Date _____

GENERAL NOTES

1.) COVER ALL FLANGES, OPENINGS & MACHINED SURFACES PRIOR TO SHIPMENT UNLESS OTHERWISE NOTED.
2.) BOLT HOLES TO STRADDLE 0° & 180° UNLESS OTHERWISE NOTED.
3.) NOZZLE REPADS TO HAVE (1) ø1/4" TELL-TALE HOLES ON HORIZONTAL CENTER LINE.
ALL OTHER REPADS TO HAVE (1) ø1/4" WEEP HOLE AT LOWEST POINT ON PAD.
4.) MANUFACTURING TOLERANCE TO BE IN ACCORDANCE WITH API STANDARD 650 7.5.
5.) ASME MATERIALS TO CONFORM TO THE FOLLOWING: FLANGES – B16.5, FITTINGS – B16.9 & COUPLINGS – B16.11.
6.) PICKLE ALL EXTERIOR WELDS. PASSIVATE INTERIOR & EXTERIOR OF VESSEL.

1 REVISIONS

REV	D.BY	C.BY	DATE	DESCRIPTION
2				AS BUILT
1	RS	AD	8/18/25	CERTIFIED
0	AD	RS	8/2/25	APPROVAL

Savannah Tank & Equipment Corp.
1517 Telfair Road, Savannah, GA 31415
(912) 233-8902

DRAWN BY: AD
CHK'D BY: RS
APPROVED BY: NP
SCALE: 1/4" = 1'-0"

NOAH INDUSTRIAL
HIGH FBCR TANK
EQUIP. #
CUST. PO #25009-0001

DRAWING NO.: 085-25-1 SHT 1 OF 5 REV. SET 1

LONG SEAMS

COURSE	ORIENTATION	ORIENTATION
1(TOP)	60°	240°
2	65°	245°
3	60°	240°
4	65°	245°
5	60°	240°
6	65°	245°
7	60°	240°
8	65°	245°

*VERT – TOP TO BOTTOM

Ship loose items:1
(6) ANCHOR CHAIRS
(2) ANCHOR CHAIRS w/ GROUND LUG

1 NOTE: ANCHOR CHAIR TO BE FIELD INSTALLED TO MATCH EXISTING ANCHOR BOLTS.

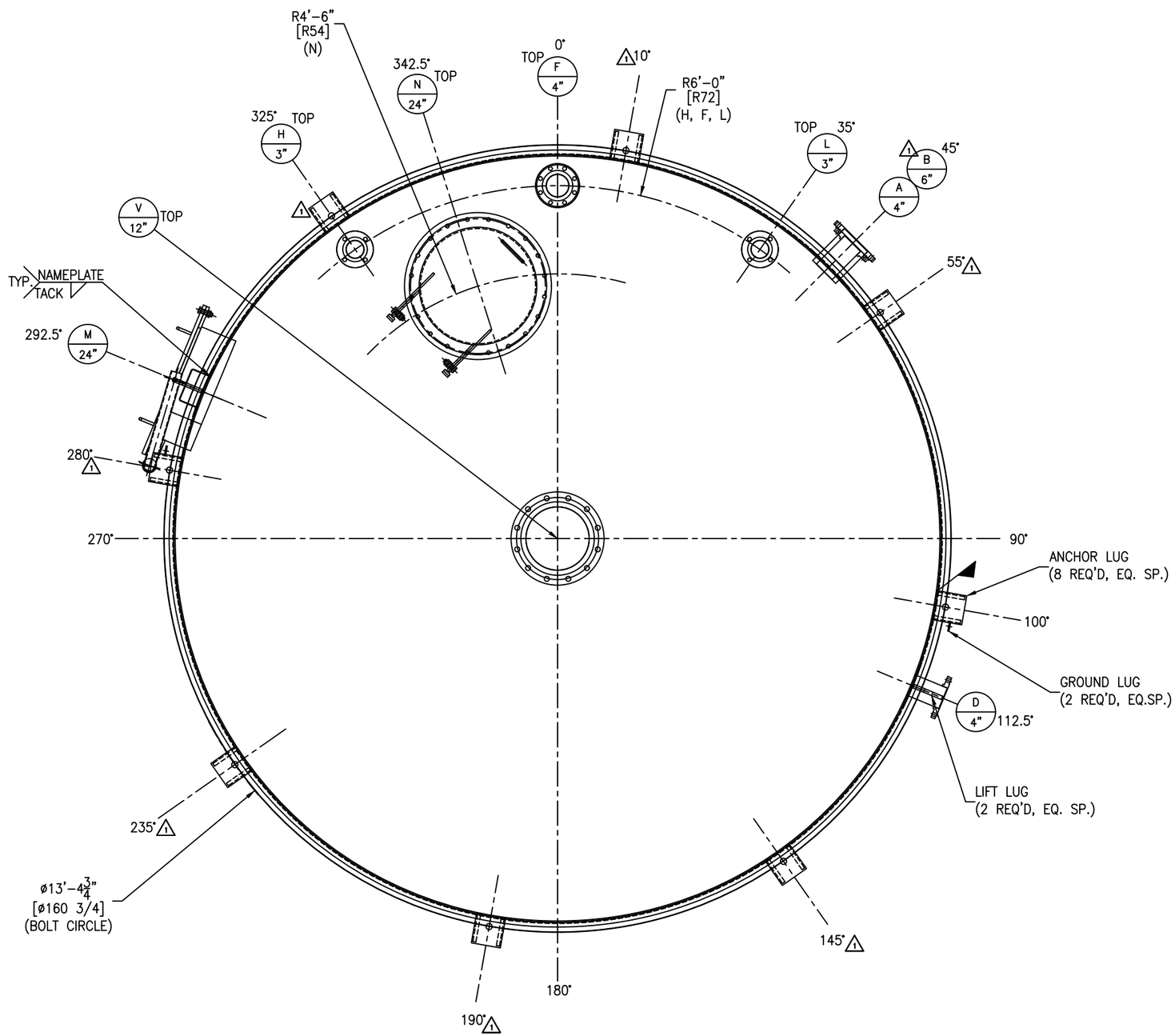

REV	D.BY	C.BY	DATE	DESCRIPTION
2				AS BUILT
1	RS	AD	8/18/25	CERTIFIED
0	AD	RS	8/2/25	APPROVAL

1 REVISIONS

Savannah Tank & Equipment Corp.
1517 Telfair Road, Savannah, GA 31415
(912) 233-8902

DRAWN BY: AD
CHK'D BY: RS
APPROVED BY: NP
SCALE: 3/4" = 1'-0"

NOAH INDUSTRIAL
HIGH FBCR TANK
EQUIP. #
CUST. PO #25009-0001

DRAWING NO.: 085-25-2 SHT 2 OF 5 REV. SET 1

FC-14

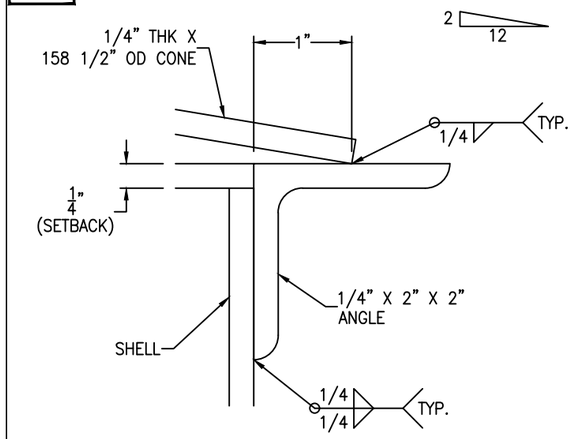

RIM ANGLE DETAIL

SCALE: 1'-0" = 1'-0"

FC-14

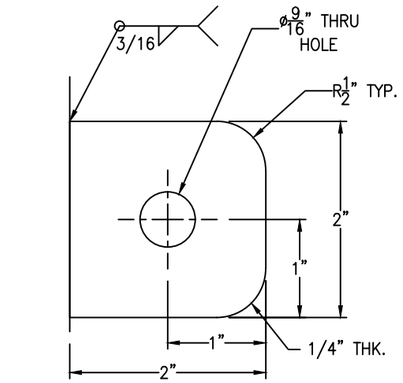

GROUND LUG IS LOCATED @ 100° & 280° △1

GROUND LUG DETAIL

(2 REQ'D) SCALE: 1'-0" = 1'-0"

NOTCH PIPE

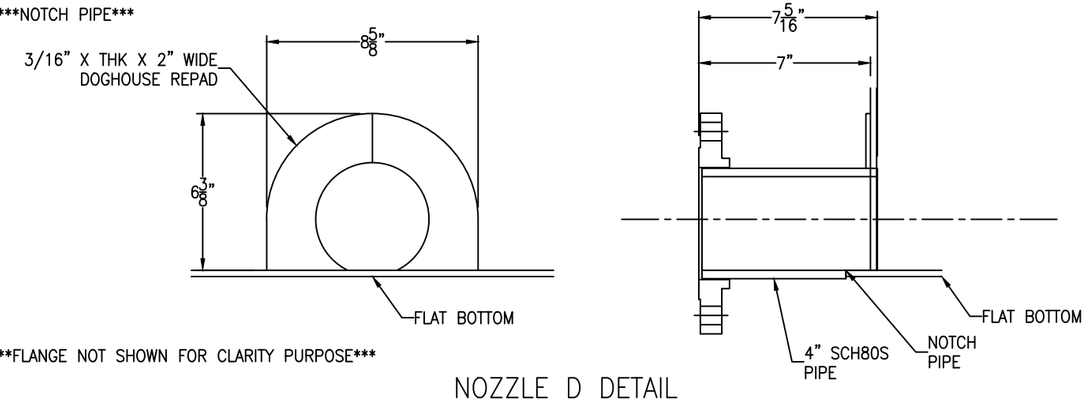

FLANGE NOT SHOWN FOR CLARITY PURPOSE

NOZZLE D DETAIL

SCALE: 3" = 1'-0"

FC-14

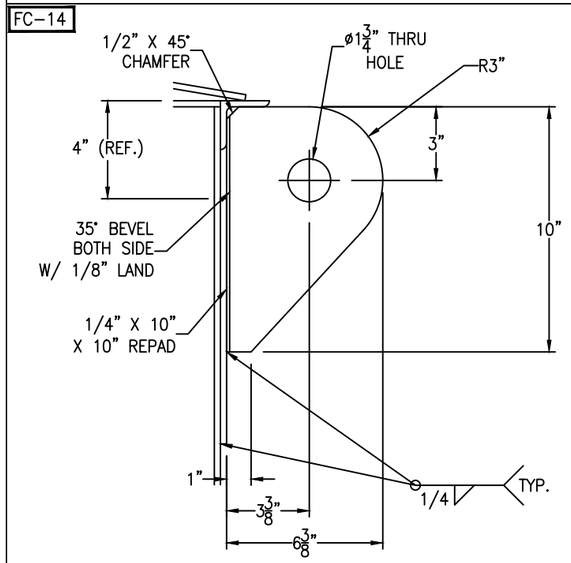

TANK WT. <= 30000#
SHACKLE PIN DIA. = 1 5/8"

LIFT LUG DETAIL

(2 REQ'D) SCALE: 3" = 1'-0"

FC-14

*ALL ANCHOR CHAIRS ARE SHIPPED LOOSE.

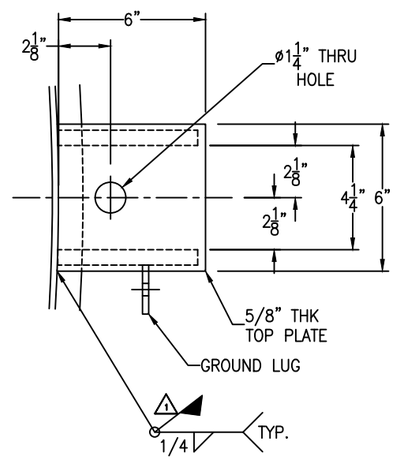

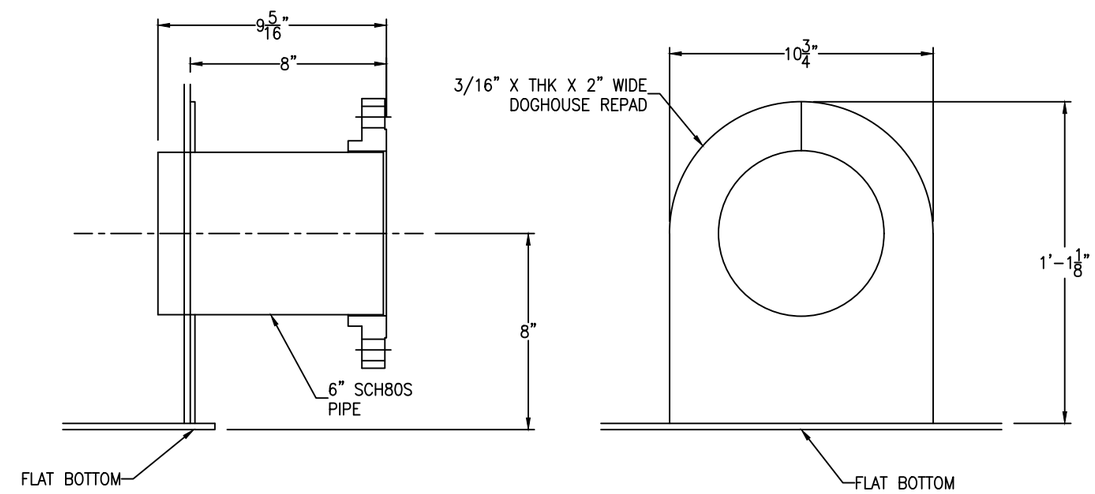

FLANGE NOT SHOWN FOR CLARITY PURPOSE

NOZZLE B DETAIL

SCALE: 3" = 1'-0"

FC-14

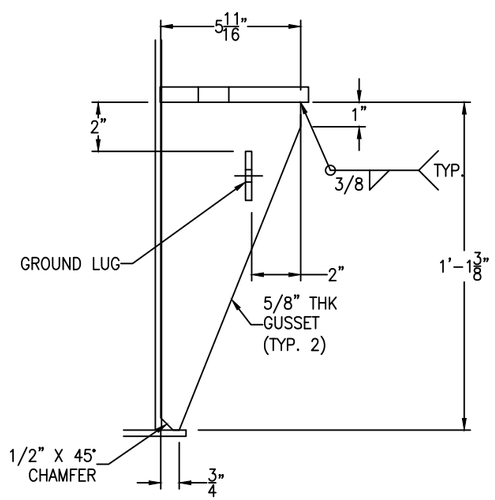

ANCHOR LUG DETAIL

(8 REQ'D) SCALE: 3" = 1'-0"

FC-14

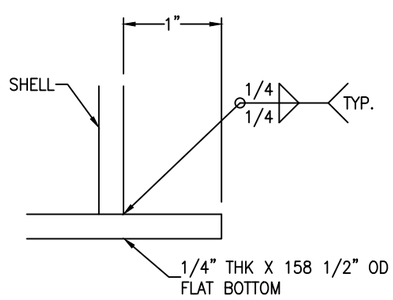

FLAT BOTTOM DETAIL

SCALE: 1'-0" = 1'-0"

FC-14

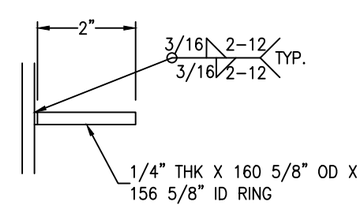

INSULATION RING DETAIL

(3 REQ'D) SCALE: 6" = 1'-0"

REV	D.BY	C.BY	DATE	DESCRIPTION
2				AS BUILT
1	RS	AD	8/18/25	CERTIFIED
0	AD	RS	8/2/25	APPROVAL

△1 REVISIONS

Savannah Tank & Equipment Corp.
1517 Telfair Road, Savannah, GA 31415
(912) 233-8902

DRAWN BY: AD
CHK'D BY: RS
APPROVED BY: NP
SCALE: 1/4" = 1'-0"

NOAH INDUSTRIAL
HIGH FBCR TANK
EQUIP. #
CUST. PO #25009-0001

DRAWING NO.: 085-25-3 SHT 3 OF 5 REV. SET 1

FC-14

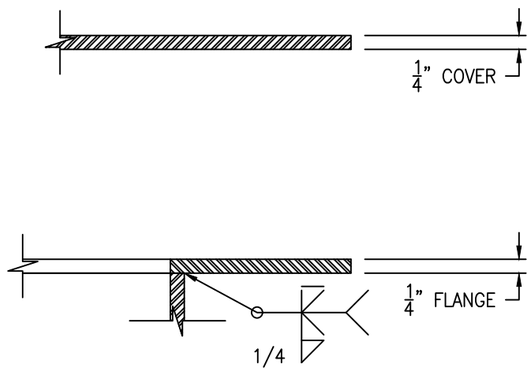

FLANGE/COVER DETAIL

(1 REQ'D) SCALE: 6" = 1'-0"

FC-14

Bolting for blind
(20) 5/8-11 NC x 1 1/2" HH BOLT
(20) 5/8-11 NC HH NUT
(1) 30" OD x 24" ID x 1/8" GASKET
W/ (20) 3/4" DIA. THRU HOLES EQUALLY SPACED ON 27 1/2" BC

Bolting for hinge
(2) 3/4-10 NC x 2 1/2" HH BOLT
(4) 3/4-10 NC HH NUT

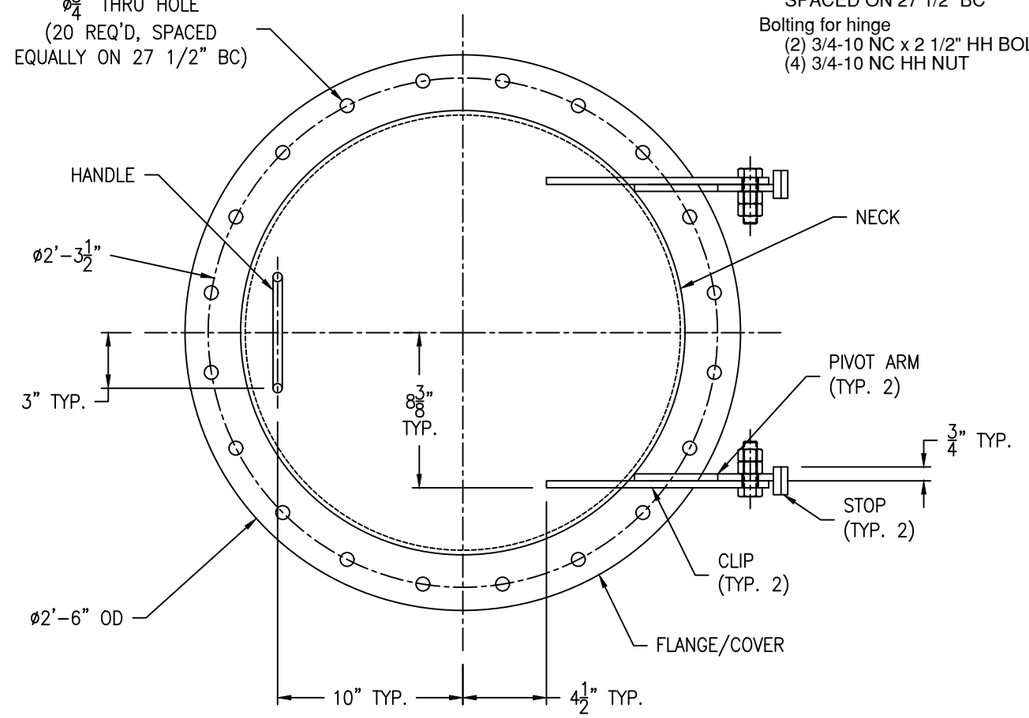

*NOTE: SEE VESSEL ORIENTATION FOR HINGE LOCATION

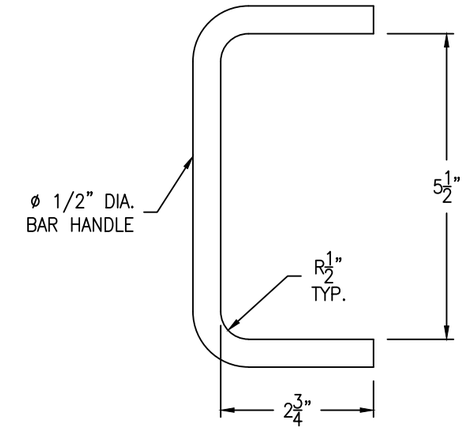

HANDLE DETAIL

(1 REQ'D) SCALE: 6" = 1'-0"

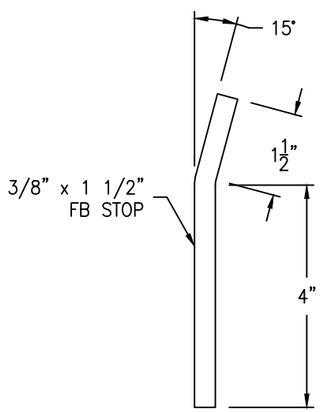

STOP DETAIL

(2 REQ'D) SCALE: 6" = 1'-0"

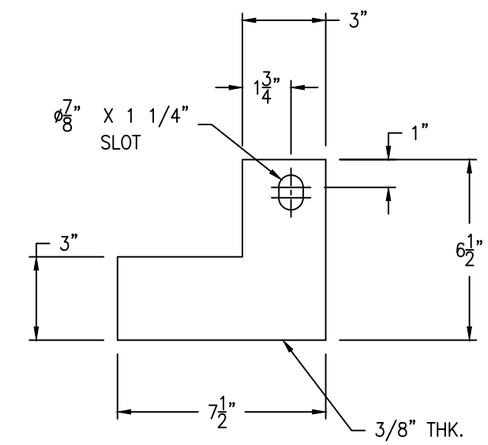

PIVOT ARM DETAIL

(2 REQ'D) SCALE: 3" = 1'-0"

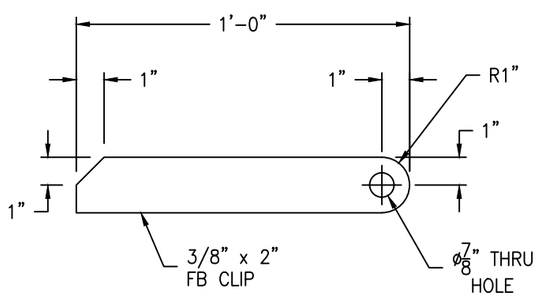

CLIP DETAIL

(2 REQ'D) SCALE: 3" = 1'-0"

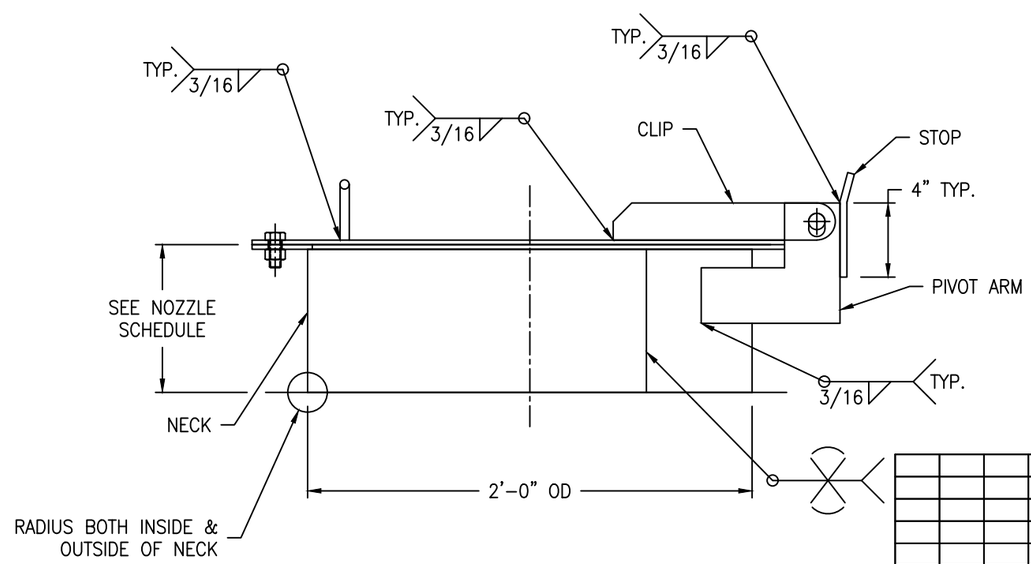

REV	D.BY	C.BY	DATE	DESCRIPTION
2				AS BUILT
1	RS	AD	8/18/25	CERTIFIED
0	AD	RS	8/2/25	APPROVAL

⚠1 REVISIONS

Savannah Tank & Equipment Corp.
1517 Telfair Road, Savannah, GA 31415
(912) 233-8902

DRAWN BY:	AD
CHK'D BY:	RS
APPROVED BY:	NP
SCALE:	2" = 1'-0"

NOAH INDUSTRIAL
HIGH FBCR TANK
EQUIP. #
CUST. PO #25009-0001

DRAWING NO.: 085-25-4 SHT 4 OF 5 REV. SET 1

FC-14

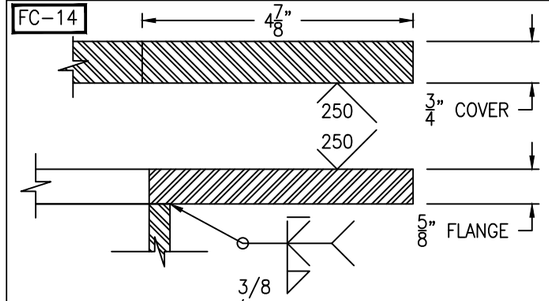

FLANGE/COVER DETAIL

(1 REQ'D) SCALE: 6" = 1'-0"

FC-14

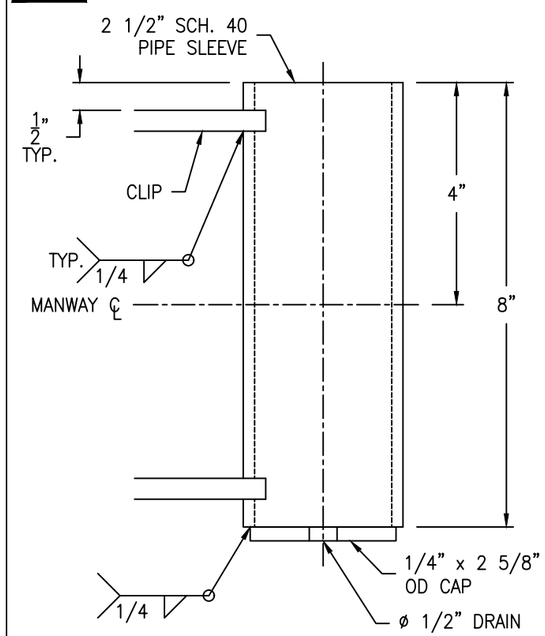

SLEEVE DETAIL

(1 REQ'D) SCALE: 6" = 1'-0"

FC-14

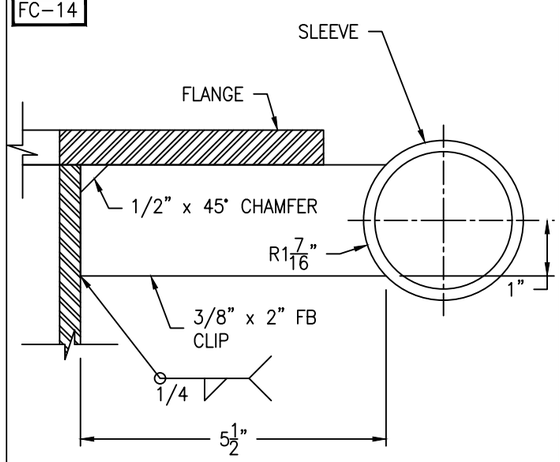

CLIP DETAIL

(2 REQ'D) SCALE: 6" = 1'-0"

FC-14

Bolting for blind
(28) 3/4-10 NC x 2 1/2" HH BOLT
(28) 3/4-10 NC HH NUT
(1) 29 3/8" OD x 24" ID x 1/8" GASKET

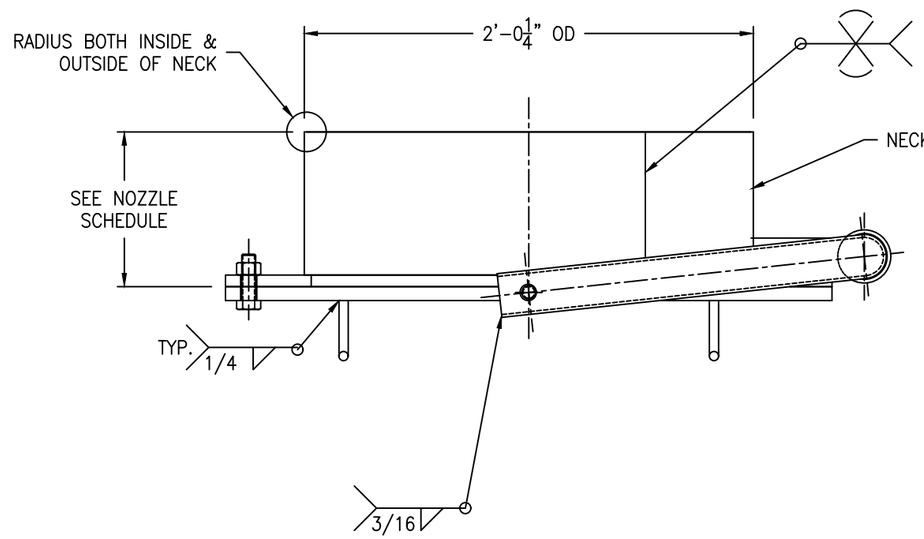

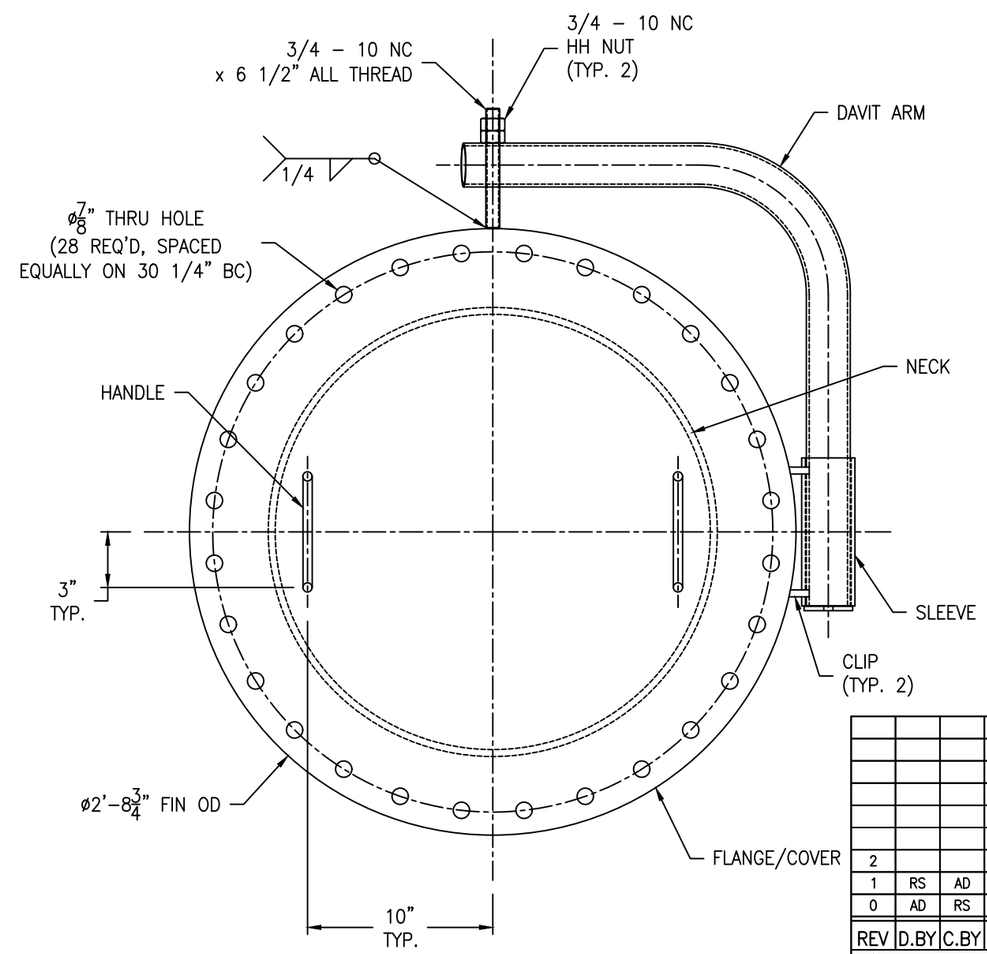

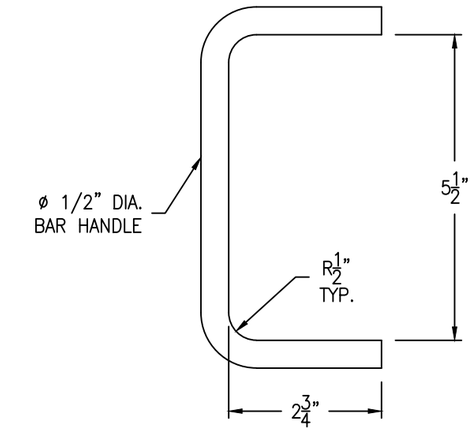

HANDLE DETAIL

(2 REQ'D) SCALE: 6" = 1'-0"

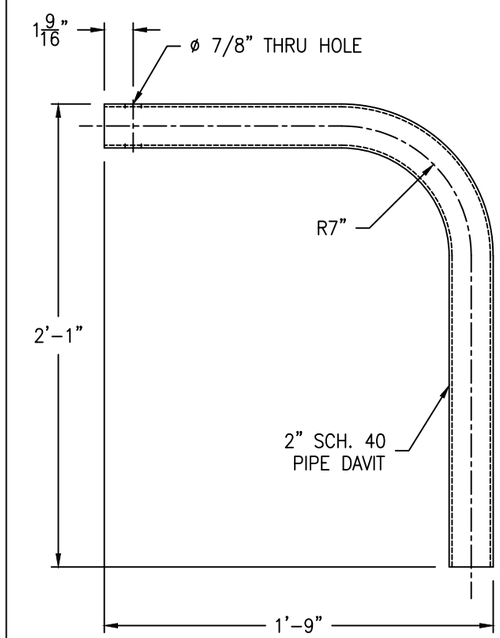

DAVIT ARM DETAIL

(1 REQ'D) SCALE: 2" = 1'-0"

REV	D.BY	C.BY	DATE	DESCRIPTION
2				AS BUILT
1	RS	AD	8/18/25	CERTIFIED
0	AD	RS	8/2/25	APPROVAL

⚠1 REVISIONS

Savannah Tank & Equipment Corp.
1517 Telfair Road, Savannah, GA 31415
(912) 233-8902

DRAWN BY:	AD
CHK'D BY:	RS
APPROVED BY:	NP
SCALE:	2" = 1'-0"

NOAH INDUSTRIAL
HIGH FBCR TANK
EQUIP. #
CUST. PO #25009-0001

DRAWING NO.: 085-25-5 SHT 5 OF 5 REV. SET 1